kader Academy

Machine Safety Specialist (CE)

Module 6: Permanent means of access

TAB4: Risk reduction and standards
Tab4-6/9 20241208

kader Academy

1

Tab4-6/9-Sh.2

Permanent means of access

EN-ISO 14122-1/4:2016

NEN-EN-ISO 14122-1
(en)

Veiligheid van machines - Permanente toegangsmiddelen tot machines - Deel 1: Keuze van vaste toegangsmiddelen en algemene vereisten voor toegankelijkheid (ISO 14122-1:2016,IDT)

Safety of machinery - Permanent means of access to machinery - Part 1: Choice of fixed means and general requirements of access (ISO 14122-1:2016,IDT)

NEN-EN-ISO 14122-2
(en)

Veiligheid van machines - Permanente toegangsmiddelen tot machines - Deel 2: Werkbordessen en looppaden (ISO 14122-2:2016,IDT)

Safety of machinery - Permanent means of access to machinery - Part 2: Working platforms and walkways (ISO 14122-2:2016,IDT)

NEN-EN-ISO 14122-3
(en)

Veiligheid van machines - Permanente toegangsmiddelen tot machines - Deel 3: Trappen, ladders en leuningen (ISO 14122-3:2016,IDT)

Safety of machinery - Permanent means of access to machinery - Part 3: Stairs, stepladders and guard-rails (ISO 14122-3:2016,IDT)

NEN-EN-ISO 14122-4
(en)

Veiligheid van machines - Permanente toegangsmiddelen tot machines - Deel 4: Vaste ladders (ISO 14122-4:2016,IDT)

Safety of machinery - Permanent means of access to machinery - Part 4: Fixed ladders (ISO 14122-4:2016,IDT)

2

Tab4-6/9-Sh.3

Permanent means of access

EN-ISO 14122-x Safety of machinery- Permanent means of access to machinery

- Section 1: Choice of Fixed Means of Access and General Accessibility Requirements

- Part 2: Work platforms and walkways
- Part 3: Stairs, stepladders and handrails
- Part 4: Fixed ladders

Tab4-6/9-Sh.4

Permanent means of access

Part 1:
- Ramp
- Stairs
- Stepladder
- Ladder

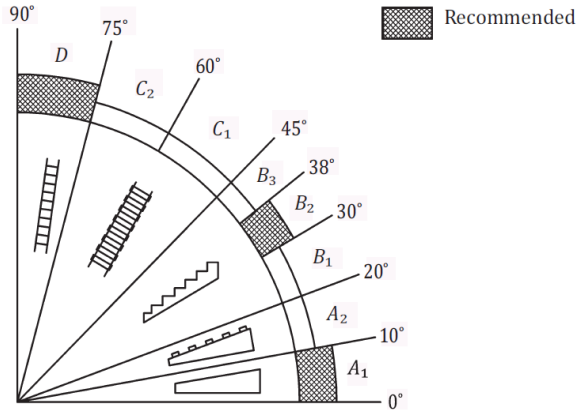

Key

A_1	ramp, recommended	B_3	stair
A_2	ramp with enhanced slip resistance	C_1	stepladder
B_1	stair	C_2	stepladder
B_2	stair, recommended	D	fixed ladder, recommended

Tab4-6/9-Sh.5

Permanent means of access

Part 2 work platforms and walkways:

- **[*h*]** Minimum clear height of 2100 mm
- *-locally 1900mm at an obstacle)*

- **[*W*]** Width of passage 800 mm
  -at a low frequency of use 600 mm
  - for a short distance (max. 2m) or piping (up to 200 mm high) 500 mm

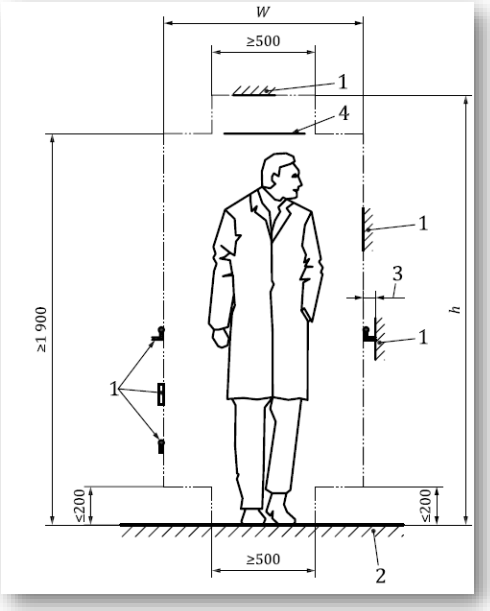

Tab4-6/9-Sh.6

Permanent means of access

Part 2 work platforms and walkways:

- Height difference floor with floor elements 4 mm
- No gaps in floor (ball diameter 35 mm)
  With a floor above a fixed workplace or place where people are often present, gaps should not exceed an opening for a ball with a diameter of 20mm.

- Provide a kick plate if the distance between floor and adjacent element is >20 mm;
- Removable floorboards

- Opening: mount floor hatch, handrail or gate..
  (Hatches only when there is no other option. For example, in a narrow walkway. When there is enough space, it is better to keep the access open with a railing and self-closing gate all around. A hatch must be self-closing when a user has passed through it.)

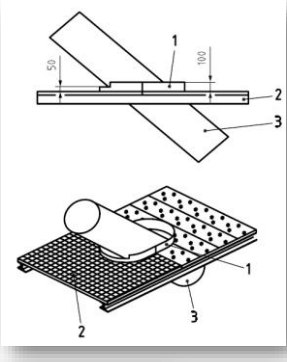

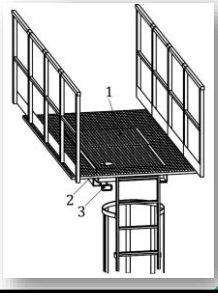

Tab4-6/9-Sh.7

Permanent means of access

Part 3 stairs, stepladders and handrails:

- Handrails:
  - Armrests, knee rests and kick plates with a height difference of 500 mm
  - Height kick plate is 100 mm and free space between reference plane and kick plate 12 mm
  - Center distance between vertical supports 1500 mm
  - Opening handrail 120 mm; Larger: Self-closing gate

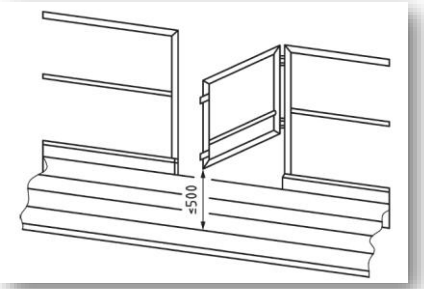

Tab4-6/9-Sh.8

Permanent means of access

Part 3 stairs, stepladders and handrails:

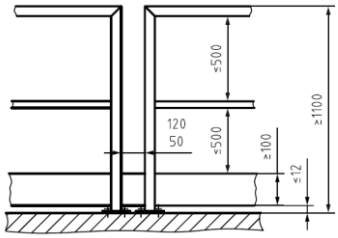

a) Guard-rail without rounding

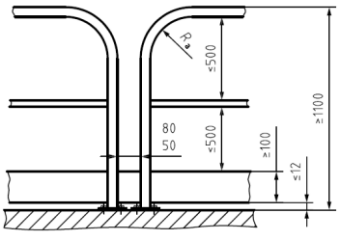

b) Guard-rail with rounding

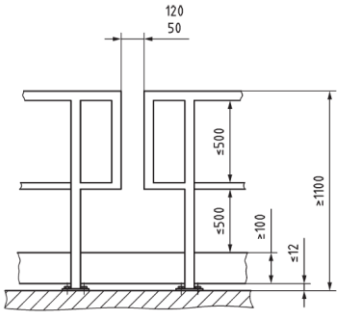

c) Guard-rail with "D" stanchions

Tab4-6/9-Sh.9

Permanent means of access

Part 3 stairs, stepladders and handrails:

- Fixed stairs:
  - Overlap between two steps (r) 10 mm
  - Step and step constant everywhere
  - Clear height above stairs 2300 mm
  - Every 4m an (intermediate) platform of at least 800mm
  - Step Depth (g): 210mm – 310mm

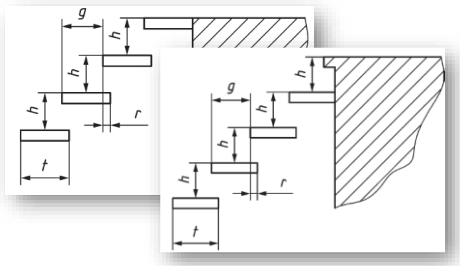

- Stepladder:
  - Overlap between two steps (r) 0 mm
  - Step depending on the angle (EN ISO 14122-3 Table 1)
  - Clear height above stepladder 2300 mm
  - Every 3m an (intermediate) platform of at least 800mm
  - Step Depth(g): 80mm

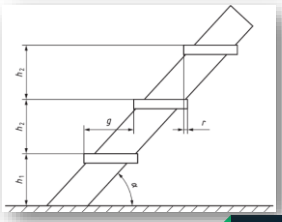

Tab4-6/9-Sh.10

Permanent means of access

Part 3 stairs, stepladders and handrails:

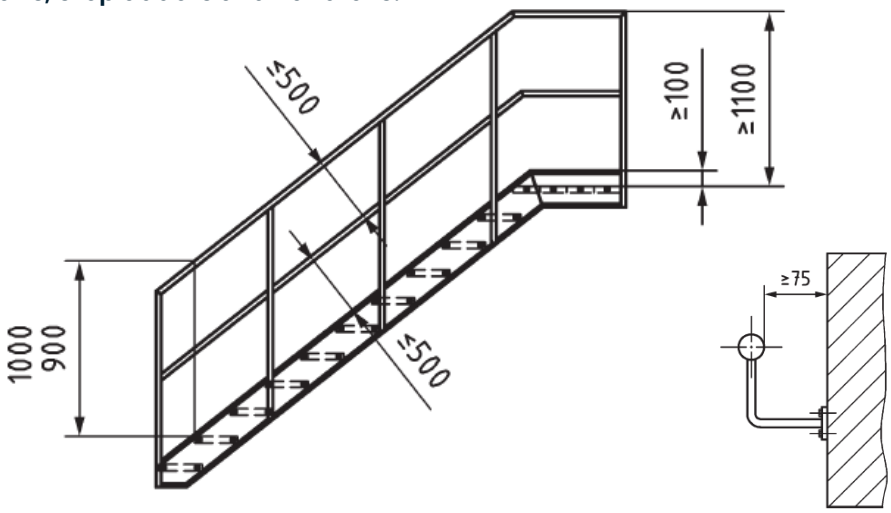

Tab4-6/9-Sh.11

Permanent means of access

Part 4 fixed ladders:

- *Fixed ladders:*
  - Fall lock as climbing height 3000 mm
  - upper rung flush with the tread on arrival
  - Space between rungs between 250 and 300 mm
  - Space between ladder and fixed parts
  - cage starts between 2200 and 3000 mm; upstairs the cage extends to handrail
  - the free space in the cage 650 mm and ≤800 mm
  - strength test (also cage), bending test, torsion test (with one upright)

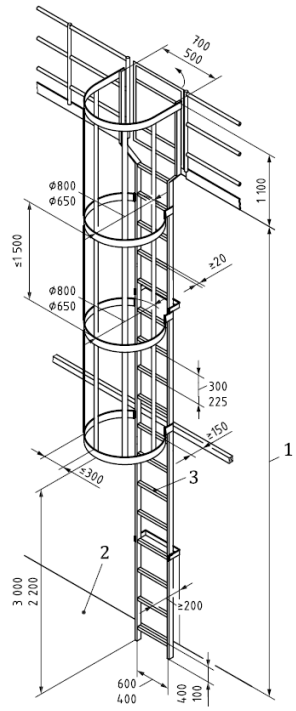

Tab4-6/9-Sh.12

Permanent means of access

Part 4 fixed ladders:

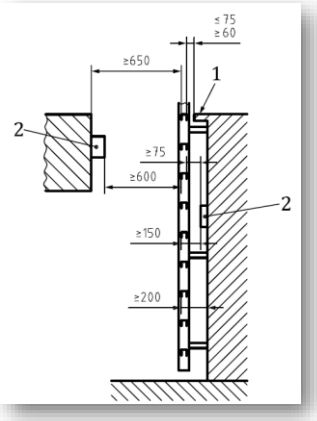

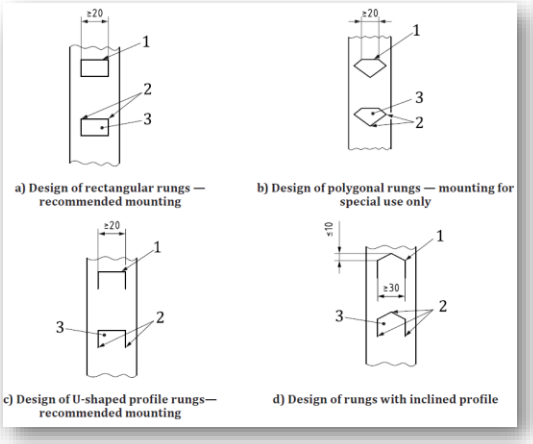

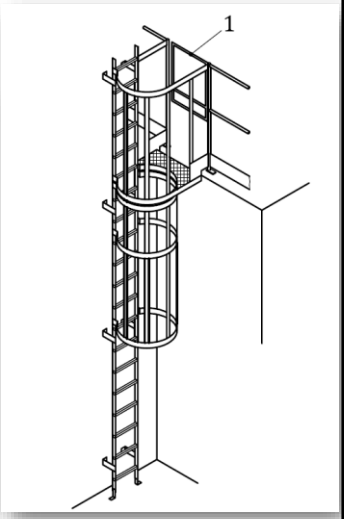

kader
Academy